VILLAGE OF KEY BISCAYNE

Office of the Village Manager

Village Council
Robert L. Vernon, *Mayor*
Enrique Garcia, *Vice Mayor*
Michael W. Davey
Robert Gusman
Michael E. Kelly
Jorge E. Mendia
Thomas Thornton

Village Manager
Genaro "Chip" Iglesias

MEMORANDUM

DATE: October 12, 2010

TO: Honorable Mayor and Members of the Village Council

FROM: Genaro "Chip" Iglesias, Village Manager

RE: ZORC Recommendations: Amendment to the Zoning and Land Development Regulations

RECOMMENDATION

It is recommended that the Council approve the changes as recommended by the ZORC and staff.

BACKGROUND

Attached are the following documents:

1. Chronology of Council Meetings on the ZORC Recommendations;

2. Executive Summary:

   a. ZORC Report and Recommendations, October 13, 2009, Chair Franklin H. Caplan;

   b.. Staff Summary of the ZORC recommendations;

3. Comparison of Boat, Dock, and Mooring Pile Regulations by Location. This chart presents and compares the regulations that appear in the attached ordinance including those recommended by ZORC. Staff is recommending the Council approve the chart format and then, if necessary, make changes from this document. This results in the removal from the ordinance the text dealing with this subject and replacing it with the chart;

4. Watercraft and Dock Regulations provided at the August 31st, 2010 Council Meeting.

5. The ordinance that was recommended by the Zoning Ordinance Review Committee and staff. Comments located in the margin briefly describe each change.

CHRONOLOGY OF COUNCIL MEETINGS ON ZORC RECOMMENDATIONS

September 1, 2009	ZORC submits their recommended ordinance and the Council "accepts" same.
October 13, 2009	ZORC Chair presents the recommendations to Council.
February 16, 2010	Council holds a workshop to review the following: Article I — Title, Intent, Purpose, Methods, and Fees Article II — Definitions Article III — General Provisions
March 2, 2010	Council holds a workshop to review the following: Article IV — Administration of the Zoning Ordinance Article V — Schedule of District, Use, and Setback Regulations Article VI — Concurrency Management Article VII — Off-Street Parking and Loading Article VIII — Signs Article IX — Landscape Regulations
April 7, 2010	Council holds a workshop to review the following: Article V — Schedule of District, Use, and Setback Regulations Sec. 30-103 — HR Hotel Resort District
June 22, 2010	Local Planning Agency (LPA) determines that the amendments to the Zoning and Land Development Regulations are consistent with the Master Plan subject to the removal of text that exceeded the height restrictions.
June 22, 2010	Village Council approves the ordinance on first reading subject to removing those regulations which required a referendum. Second reading is scheduled for August 31, 2010.
August 31, 2010	Village Council reviews the ordinance on second reading and continues the public hearing to October 12, 2010 for further consideration. Village Council requests staff provide an Executive Summary which provides greater analysis of the changes than is provided in the "comments" that staff submitted on first reading.

EXECUTIVE SUMMARY

1. ZORC Report and Recommendations, October 13, 2009, Chair Franklin H. Caplan
2. Staff Summary of the ZORC recommendations

VILLAGE OF KEY BISCAYNE
ZONING ORDINANCE REVIEW COMMITTEE

REPORT AND RECOMMENDATIONS

Presented October 13, 2009
on behalf of the ZORC
by
Franklin H. Caplan, Chair

CONTENTS

OVERVIEW	Page 1
Organization	Page 1
Acknowledgements	Page 1
Recommendation Highlights - Summary	Page 2
Road Not Taken – Close Calls	Page 2
Section I. BACKGROUND	Page 3
Third ZORC	Page 3
Subcommittees	Page 3
Prior ZORC Experience	Page 3
Drafting and Quality Control	Page 3
Revised Texts	Page 4
Progress Completion	Page 4
Work in Progress	Page 4
Chair's Report	Page 4
Section II. OBSERVATIONS, METHODS & GOALS	Page 4
Initial Impressions	Page 4
Prior ZORCs and Code Evolution	Page 4
BPZ Input	Page 5
ZORC Conclusions	Page 5
Jumping-Off Point	Page 5
Work Method	Page 5
Code Critique	Page 5
Look Outside	Page 6
ZORC Rapport	Page 6
Incrementalism	Page 6
Specific Issues; Specific Goals	Page 6
Bulk of Houses	Page 6
Neighborliness; Streetscape	Page 7
No Redevelopment Surprises	Page 7
Consistency with Comp Plan	Page 7
Public Confidence	Page 7
User-Friendly Presentation	Page 7
Sustainability – Green Initiatives	Page 7
Judgment Calls; Competing Principles; Finding Balance	Page 7
Ideas vs. Answers	Page 7

Delegation to Staff vs. Limits on Discretion		Page 8
Property Rights vs. Regulation		Page 8
Cautionary Note / Concerns about Effectiveness		Page 8
What is Most Effective?		Page 8
Reliability – Zoning as a tool		Page 8
SECTION III.	ZORC RCOMMENDATIONS – Summary of What and Why	Page 8
Article I.	Title, Intent, Purpose, Method and Fees	Page 8
Article II	Rules of Construction and Definitions	Page 9
Article III	General Provisions	Page 10
Article IV	Administration of the Zoning Ordinance	Page 11
Article V	Schedule of District, Use and Setback Regulations	Page 13
Article VI	Concurrency	Page 19
Article VII	Off-Street Parking and Loading	Page 19
Article VIII	Signs	Page 19
Article IX	Landscape Regulations	Page 20
Article X	Legislative	Page 20
Other Suggestions		Page 20
SECTION IV.	RECOMMENDED NEXT STEPS	Page 20
Roll-Out / Workshops		Page 20
Sustainability – Green Initiatives		Page 21
Standing ZORC or Successor		Page 21
Rationale		Page 21
Criteria		Page 21
Zoning In Progress		Page 22
Map and Follow The Road Not Taken		Page 22

VILLAGE OF KEY BISCAYNE
ZONING ORDINANCE REVIEW COMMITTEE

Chair's Report and Summary of ZORC Recommendations

October 13, 2009

OVERVIEW

This document, referred to as the "Chair's Report", summarizes the work and recommendations of the 2007-2009 ZORC. The Chair's Report accompanies a draft of the Zoning Code itself. That draft, referred to as the "Draft Ordinance", sets forth the ZORC-proposed revisions to the Code, marked in color to show how the proposed changes differ from the existing Code. Comments of the ZORC, the BPZ Director or legal counsel are shown in "balloons" along the right side of the draft. The Chair's Report and Draft Ordinance together comprise the ZORC report to the Council and community. With this presentation, the ZORC's mission is completed.

- ***Organization***: The Chair's Report is in four main parts following this overview:

  I. Background
  II. Observations, Methods & Goals
  III. Recommended Changes
  IV. Recommended Next Steps

- ***Acknowledgements:*** We acknowledge, with gratitude:

  - The support, guidance and assistance of Jud Kurlancheek, BPZ Director, and Chad Friedman, Esq., our liaison with the office of the Village Counsel. Their knowledge and collaboration were essential. We thank Bill Fehr as well for his support and help along the way.

  - The dedication and skill of Kelly Josephson of the *Islander News*, who attended every meeting, accurately reported on our work and contributed critically to our goal of communicating with the public.

  - The Council for its wisdom in establishing a ZORC. It was needed, and remains so. We thank the Council as well for the opportunity to serve our community.

  - Those in the community that have followed and expressed interest in our work. Many contributed ideas and criticisms for which we are grateful.

  - The individual members of this ZORC.

- ***Recommendation Highlights***: Major ZORC recommendations are, in sum:

  - Renewed attempt to manage bulk and mass in Residential District, stopping short of full-blown architectural regulation, principally by:

    - Establishing Gross FAR, comprising everything that contributes to visual mass

    - Bringing front-entrance and driveway close to grade to moderate the sense of looming verticality and for better streetscape

  - Push houses forward for more privacy and better streetscape

  - Garages to the side yard on larger lots

  - HR District – a "salvage" effort to improve the site plan, protect Holiday Colony and induce a new hotel

  - Substantial HR District changes include FAR reduction by nearly 300,000 square feet, FAR and height zones resulting in low scale, low intensity development nearest Holiday Colony, and bonuses to achieve a hotel

  - C-1 Commercial District:

    - L'Esplanade and 240 Crandon: change from Office to a Commercial and Office mix, allowing for greater flexibility and mix of compatible uses

    - Attempt to catalyze entryway development by approving a small hotel with ground floor retail, as a permitted use for the entry block; subject to traffic management and design standards

  - Administrative and regulatory clean-up; clarifications regarding purpose, communications with the public, guidance on discretion and to aid interpretation, and refinement of district regulations

  - "Personalized" to Key Biscayne; less generic; better tailored to the casual, neighborly 2020 Vision "Village in the Village" ethos

  - Many grammatical edits; improved readability; consistency

  - Establishment of a ZORC-like standing committee to address long-term planning and zoning issues and to recommend changes in regulations to correspond to changing needs in the Village

- ***Road Not Taken; Close-Calls:*** Examples, in sum:

- Architectural Standards; Architectural Review Board
- Eliminate outright Multi-Family Residential in the HR District
- Thoughts and recommendations as to Comp Plan and zoning provisions governing redevelopment of the PUDs (Grand Bay, Ocean Club and Key Colony) if a major casualty loss or natural disaster occurs (study item)
- Other forms of coding (modified form-based; Best Practices)
- Redevelopment vs. demolish and rebuild. Owner economics and discretion vs. FEMA constraints -- policy of sustaining our population, helping parents stay and kids return

SECTION I
BACKGROUND

- ***Third ZORC***. The current ZORC was established in December 2006. Members were appointed in January 2007, and have met in full committee approximately 50 times beginning that month and ending October 2, 2009. The members are:

Frank Caplan, Chair	Arturo Aballi, Vice Chair
Deborah de Leon	Mario Garcia-Serra
Willie Borroto	Barry Goldmeir
Roberto de Cespedes	Jose Ortega
Basha Hicks	Julie Alvarez

- ***Subcommittees***. Various working subcommittees met separately on numerous occasions throughout the ZORC tenure. These covered, among other things, Definitions, Graphics and Presentation, FEMA and Renovations, FAR Bonuses, transferrable development rights (TDRs), HR – Density Bonuses, and Green Ordinance.

- ***Prior ZORC Experience***. Three of the current members, Willie Borroto, Julie Alvarez and Deborah de Leon, were members of the two prior ZORCs. ZORC I's work ended in approximately 2000. ZORC II's work ended in approximately 2002. This ZORC's review therefore is the first comprehensive review in approximately five years.
  - We considered reflections from the Director and the prior ZORC members as to what they set out to accomplish and prior ZORC successes and disappointments.
  - Prior ZORC disappointments were a preoccupation of this ZORC.

- ***Drafting & Quality Control***. The Draft Ordinance was prepared under the supervision of Mr. Friedman at the office of the Village's counsel. The drafting followed discussion points and decisions reached at our meetings, as recorded by Mr. Kurlancheek. Minutes were approved by the ZORC.

- ***Revised Texts***. Substantive recommendations took the form of actual proposed text in a revised draft code. This in part was for efficiency and was also based on ZORC I and ZORC II experience of difficulty in assuring that decisions were translated as intended, without seeing actual revised text.

- ***Progress Completion***. ZORC reviewed draft sections as they progressed and at first draft completion as time permitted. Often, time did not permit. While edits and sections were being typed and incorporated, the ZORC typically was discussing other topics. Opportunities to review previous work product were limited.

- ***Work in Progress***.

  - Despite ongoing transcription of ZORC decisions into revised text, the Draft Ordinance was being assembled and edited even after the last full ZORC meeting on October 2, 2009.

  - We did not conduct a final substantive review or even proofread the entire Draft Ordinance. To assist ongoing review, the Chair noted a number of still-unresolved discussion topics, and questions or typos that arose in transcription. These are shown by comment "balloons" in the Draft Ordinance. Thus, the Draft Ordinance remains a "work in progress". The FAR Bonuses and Gross FAR text especially requires substantial editing as of the preparation of this report.

- ***Chair's Report.*** This report was prepared without the benefit of a blacklined Draft Ordinance, which was still in preparation during the weekend prior to submission to Council. ZORC and the Director reviewed a draft of the Chair's Report on October 2, 2009. ZORC requested continuing review of this report and the Draft Ordinance by the Director, legal counsel and the Chair, and by delegated members if they continue, in order to catch and correct errors or material omissions, if there are any. If there are, they are inadvertent.

SECTION II
OBSERVATIONS, METHODS & GOALS

- ***Initial Impressions***

  - ***Prior ZORCs and Code Evolution***

    - 2 Prior ZORCs and some 15 amendments since '95 adoption
    - Prior ZORC focus was similar to ours in RU, but…to what result?
    - Code amendments in '00 and '02 are positive
    - But, Code was never flyspecked top to bottom

- Our Code derived from the Miami-Dade Zoning Code; a dubious parentage, justifying a close read

o ***BPZ input***

- Code is basically easy to administer; it works
- No perceived major deficiencies
- New houses are disproportionately large on relatively small lots
- No disconnects between Comp Plan and Zoning Code
- Anticipated fresh look and clean-up -- no radical surgery

o ***ZORC Conclusions***

- Sense of dissatisfaction with building mass, design and proportionality of neighboring developments; and effects on the as-built character of the Residential districts, despite 2 ZORCs
- Unhappiness with traffic congestion & loss of "The Way We Were"
- Sonesta Aftermath:
  - Substantial Residential Density in HR?
  - No Hotel?
  - Skepticism about Our Code and Comp Plan – Sense that they failed us
  - Skepticism about our Process –
    - Contentious, More Heat than Light
    - Widespread dissatisfaction with result
  - Charter Amendment results portend lack of confidence
  - Need to restore confidence (Charter Amendment shackles process)

o ***Jumping-Off Point***

- The Code is good in substance
- Complex and not so good in presentation
- Overall could be better
- Mixed results from prior ZORCS, which substantially reduced size of single family houses but did not address architectural standards or otherwise seek to moderate the appearance and effects of disproportionate mass
- What can we do that prior ZORCs didn't? How can we improve?
- Why doesn't zoning work more reliably?

• ***Work Method***

o ***Code Critique*** – Read critically, in detail

- Deep Dive as distinct from cursory read or spot review --
  a full critical review after 5 years, post-2020 Vision, post-Sonesta, post-Charter amendment, based on observed conditions and criticisms

- Look for internal consistency & clarity – obvious room for improvement
- Presentation: Generic vs. "Us"
- How well does our Code serve us? How could it be better?

- ***Look Outside***: consider current and anticipated conditions
- Explore the Island / look at what's built
- Analyze unattractive or controversial features - what makes them so?

- ***ZORC Rapport***

- Patience, effective debate, team-building for full exchange
- Non-ideological approach
- Draw on local experience
- Think Listen, Learn:
  - What's needed to advance our goals?
  - How best to regulate: minimize interference, cost and still be effective
- Develop expertise; ***understand cause and effect***
- Think Representatively:
  - Whose interests are affected?
  - Different Viewpoints.
  - What views are not at the table?
- Seek Consensus
  - Consensus-seeking process more credible and assuring
  - Consensus product likely to be well-received

- ***Incrementalism***

- Work with Code as it is – avoid the "Bridge Too Far"
- Seek effective results – decision-oriented
- Analyze & brainstorm, but not to detriment of decisiveness
- Don't let radical change subvert mission
- Focus on presentation and readability

- ***Specific Issues; Specific Goals***

  - **Bulk of houses**

- Effect of mass on privacy and streetscape aesthetics
  - Architecture & Design – "good" vs. "bad" vs. "who are we to say?"
- Focus on why RU continues to be unsatisfactory

- **Neighborliness; Streetscape**

  - Interrelationships – house to house; house to street; district to district
  - Compatibility & proportionality

- **No Redevelopment Surprises**

  - Sonesta reactions
  - Look at every Lot in every district
  - What about PUD redevelopment?
  - Anticipate placement of future houses of worship

- **Consistency with Comp Plan**

  - No issues or concerns noted (except HR, entryway and district mixed-use recommendations)
  - But larger question: how well does our Comp Plan describe our goals and promote our desired built and natural environment?
  - 2020 Vision Statement
    – We all buy into the "Village in the Village" ethos
    (but we do not cite to it since it has no force of law)

- **Public Confidence**

  - Inherent cynicism; attention only when something adverse occurs
  - Shared values? – we think so
  - No end-runs by variances
  - Reliability, sensible delegation and discretion
  - Enforcement – make rules work as intended

- **User-friendly presentation**

  - Clarity; ease of understanding; internal consistency
  - Remove redundancies and wordiness
  - Graphics / Best Practices

- **Sustainability – Green Initiatives**

  - Green Building Ordinance
  - Best Practices (organic composting etc.)

- ***Judgment Calls; Competing Principles; Finding Balance***

  - ***Ideas vs. Answers***

- Not often a right or best answer
- Value judgments /competing principles are at issue throughout
- Judgment calls; Search for most effective, least offensive ideas
- Competing principles need to be reconciled, resulting in imperfect solutions

o **Delegation to Staff vs. Limits on Discretion**

- Practical administration requires delegation
- Effective delegation requires discretion
- Control and standards mitigate concerns about mistake/abuse of discretion

o **Property Rights vs. Regulations**

- Age-old question of balance
- "Serve and Protect" vs. "Don't Tread on Me"

- ***Cautionary Note: Concerns about Effectiveness***

o **What is most effective?**

- Regulation of Use vs. Form
- Regulation by Prescription vs. Inducement (bonuses)

o **Reliability – Zoning as a tool**

- If you want a particular result, prescribe it; mandate it
- How reliable are inducements by bonuses?
- Potential for manipulation
- Reliable "cause and effect" requires clairvoyance
- Enlightened thinking about "cause and effect" in zoning is a major asset
- ZORC ambivalence about FAR Bonuses – inadvertent "McMansion Effect"

SECTION III
ZORC RECOMMENDATIONS – SUMMARY OF WHAT AND WHY

ARTICLE I
TITLE, INTENT, PURPOSE, METHOD AND FEES

Goals Throughout:

More consistent use of defined terms. Reduce wordiness and redundancies.

***Intents and Purposes* – 30-2**:

Personalized to Key Biscayne. Added community character, ecological quality; refer specifically to Comp Plan "values"; interrelationship between natural and built environment; landscaping. More specific statement of purpose can assist in cases where interpretation is needed.

Road Not Taken: Architectural standards, architectural review process

Boundary Line Standards *@ bay or canal in absence of a bulkhead* – **30-3 (e) (4)**.

Clarify standards in determining mean high water mark to establish waterfront lot line

ARTICLE II
RULES OF CONSTRUCTION AND DEFINITIONS

Goals Throughout:

Less ponderous presentation. Less bloated with jargon, but still precise, clear, defensible, easily administered and enforceable to protect our interests and champion our goals.

There are 274 defined terms in Article I. We propose approximately 215 and question the need for a number of those that remain in the Draft Ordinance. We propose in some instances replacement definitions that we think do a better job of defining accurately and succinctly what they intend to define.

Sentence structure and proper English. Fewer dependent clauses.

Proposals Throughout:

- Eliminate defined terms not used
- Eliminate or consolidate multiple or confusing terms for same concept
- Eliminate definitions used only in common usage and not substantively
- Tailor defined terms to reflect substantive usage
- Fix inaccuracies and inconsistencies in terminology
- Put regulatory substance in the regulations sections
- Consolidate qualifications or exceptions within the definition or within the regulatory text, as appropriate
- Reduce wordiness and run-on examples
- Use defined terms consistently

ARTICLE III
GENERAL PROVISIONS

***Scope* - 30-20.**

Include affirmative statement re: scope and purpose: "These Regulations shall govern the Development and Use of land and activities affecting the use of land within the Village."

***Re-subdivision or Altered Use of Hotels* – 30-23.**

Clarified text relative to hotel rooms as being distinct from multi-family dwelling units, regardless of existence or installation of cooking facilities.

Conversion from one use to another requires compliance with Use change provisions. Current text was vague on this point.

Storage on Residential Properties 30-28.

Example of property rights vs. regulation debate. We discussed aesthetics relative to PODs, trailers, etc. and opted in favor of owner discretion and convenience.

Recommend: Include provision for Director discretion and imposition of standards as needed to protect the neighborhood. Director is administering this presently, but authority is unclear.

Non-Conforming Setbacks and Extension of Buildings – 30-29.

Example of policy to encourage renovations. Clarified ability of owner to extend into setback to enlarge existing residence.

Non-Conforming Structures and Uses. 30-30.

Clean-up re: requirements for lawful non-conforming uses and structures. Sunset if abandoned for 6 months. Goal is to recognize legal status of non-conforming structures but to be strict in evolving into full compliance.

Determination of Uses not listed - Sec. 30-32.

We impose a more defined standard on Director discretion in approving as permissible a Use not listed expressly as Permitted. No adverse effect, similar character and intensity in the vicinity and the district overall, and no increase in Density, Height, Floor Area or FAR.

Development Permits – 30-34.

We provide for notice to abutting owners.

Additional Miami-Dade Regulations – 30-41

Recommend eliminate residual incorporation by reference clause. Our Code is all ours.

Floor Area and FAR – 30-42.

Overall text clean-up. We added to Floor Area the space occupied by a generator (BPZ suggestion). As of writing of Chair's Report, editing is still needed to this section and correlative regulations at 30-100. Clean-up needed from transcription of ZORC minutes.

Height – 30-44

Single family and Two-family district – we refer to elevation measured to top of the roof, instead of highest tie-beam. Anecdotal feedback referred to this as an ambiguity and source of dispute.

ARTICLE IV
ADMINISTRATION OF THE ZONING ORDINANCE

Variance Procedures – 30-63

Prohibition: Use, Density, Height, Signage Variances.

- Prohibition on signage variances is new.
- Strong ZORC consensus to prohibit sign variances. We are aware of 1 such variance and think it was a mistake.
- Recommend prohibition on height variances, except as needed for solar panels.

Supervisory, Administrative and Regulatory Variances – 30-64 - 30-66.

- "shall" changed to "may" in context of supervisory Variances.
- Suggest specific allowance for minor fence variances if agreed to by neighbors. Policy of convenience, flexibility, and cost-savings.
- Suggest consideration of limited height variance for sole purpose of affixing a solar panel. Policy of encouraging Green technology and practice.
- We question the purpose and effect of administrative variances and suggest limits on the applicability of administrative variances.
- Public notice requirement – we suggest expanding public notice requirements. Policy of transparency and public confidence.

- We propose better clarity that Council may impose conditions when granting variances, as necessary to further the purpose of the district or compatibility with other property. We found this provided in the area of conditional use permits, but not in the variance area.

- We suggest consolidating provisions dealing with procedures and appeals. They are scattered, presently

Public hearing and notice requirements – 30-68.

- We propose a firmer statement requiring notice to property owners of record located within 300 foot radius, or such greater distance as the Manager may prescribe. The current text implies that notice is a courtesy, not required, and that there is no consequence to failing to give notice.

- Policy of transparency and public confidence.

Ex Parte Communications – 30-69

Road Not Taken. Tension between easy communication, idea exchange and effective brainstorming, and concerns about lobbying and disproportionate influence.

We recommend action on this, whether or not change results. Policy of transparency and public confidence.

Administrative Building Moratoria. 30-73 etc.

We suggested slightly broader scope to factors that might justify a moratorium, to include inquires into whether the district regulations need improvement in addition to whether districts themselves are appropriate. Sonesta is an example of this: At some point along the way, we might have frozen permitting and re-thought whether MF residential belongs in HR.

We suggested that public hearing be required if Council thinks to vacate an administrative moratorium or zoning in progress status. We thought it strange that the Manager could conceive of a situation so worrisome as to justify a moratorium and that Council could negate that precaution without a hearing. Policy of transparency and public confidence.

Site Plan Review- 30-80

Suggested tweaks to a section that seems to be well-conceived. Main point - an application should include a specific description of FAR bonuses that are included in the design. This is consistent with the current text as regards FAR bonuses. We think this makes the basis for bonuses more clear.

For tabular presentation, we add Lot Coverage and pervious area, and distinguish between Dwelling Units and Hotel Rooms.

As a design goal, we suggest re-thinking the site plan "value" of clustering buildings. A given site might be better serve by building separation. Ocean-front development is an example.

We added stronger references to improving the tree canopy and fix what we viewed as a drafting glitch, by suggesting that open space be reviewed and approved by the Director in addition to the Village Attorney.

We added stronger references to pedestrian and bike accommodations and buffers.

ARTICLE V
SCHEDULE OF DISTRICT, USE, AND SETBACK REGULATIONS

Single Family and Two – Family – 30-100

Major ZORC focus: to address the "bulk", "privacy" and "streetscape" criticisms. We edited the FAR Bonuses and added a new concept for Gross FAR. The Gross FAR concept is a major step: A device to limit and diminish the appearance of mass while not affecting Floor Area.

Goals:

- Guide good design, reduce mass; encourage better proportionality; more variety in facades; detailing to minimize a monolithic appearance; step-backs for privacy; more openness

- Encourage push-forward toward street, for better uniformity on streetscape and larger private realm in rear

- Prescribe garage doors on the side on larger lots

- Address driveway grade for improved drainage and better relationship of house to street

- Look for ways to encourage renovation

- Emphasis on tree canopy, landscaping and enforcement

Road Not Taken: Or rather, Blind Alleys: Architectural standards; architectural review.

30-100 Changes – A Short-List of What and Why

- We clarify starting or base FAR as distinct from maximum FAR, which is achieved through FAR Bonuses

- We tinker with the FAR Bonuses to get to maximum FAR

- We establish a new Gross FAR standard to define gross "building envelope" including everything that contributes visually to mass

- We added porch dimensions for FAR Bonus – visually better and more functional

- We changed Front and Rear Setback bonuses to push structure forward – better streetscape and larger private realm; better buffering for neighbors

- We increased bonus for garages not facing the street

- We added bonus for roof line variety. Encourages more than one plane for visual interest. Reaction to the monolithic block design and build.
  But, residual ZORC concern and Road Not Taken: beware of McMansion effect.

- We added bonuses for some architectural detailing – reveals and moldings.
  But, residual ZORC concern and Road Not Taken: McMansion effect.

- We added a maximum height qualification to better provide for limited habitable space above a second story. Encourages attic space planning.

- We added exterior Wall step-backs and better treatment for balconies and terraces. Visual interest, mitigate against the monolithic.
  But, residual ZORC concern and Road Not Taken: McMansion effect

- We added an "openness" design requirement at and above 22. 5 feet. Less uninteresting, uninterrupted mass. Mitigate against the monolithic.
  But, residual ZORC concern and Road Not Taken: privacy and McMansion effect

- We specify architectural design projections at 22.5 feet. Encourage less uninteresting, uninterrupted mass. Mitigate against the monolithic.
  But, residual ZORC concern and Road Not Taken: privacy and McMansion effect

- We fix maximum elevation of the lowest finished floor and of main entrance at Base Flood Elevation.
  Improves height relative to grade and street, and consistency and proportionality among neighbors. Better visual and design conception at streetscape by making front entrance obvious as such.
  Unlike the McMansion concerns, this is widely seen at ZORC as a very good idea.

- We tweak allowances for roof ornaments and parapets

- We fix grade of a driveway at no more than 20% above the crown of the road. We think this has an important streetscape value.

- We simplify setback regulations, eliminating unneeded distinction between IR interior and waterfront

- We increase setbacks on larger lots – better separation, better privacy, more pervious space

- We allow 1 story additions to follow existing Wall line. 2 story additions are subject to the height step-backs we've recommended.
  Encourage renovation

- Boat and trailer storage perpendicular to street. Nose-on view.
  Better curb appeal.
  Road Not Taken: more restrictions on storage in yards

The Paradox:

- A lot of architectural specs despite reluctance to specify architecture.

- Architecture standards - an early and intense discussion that was never revisited. It should be.

- Reaction to Coral Gables: good and bad. For Key Biscayne, its not a question of Coral Gables ARB or nothing. There are maps for this Road Not Taken.

Effectiveness Concerns:

- Its easier to criticize what you don't like than it is to define what you like – a difference between creation and kvetching.

- This gets into subjectivity; which we are loathe to do … at a point.

- As stated above, if you want a desired result, require it. Inducements by bonuses are uncertain. But, competing principles, politics and deference to subjectivity impose restraints.

Docks

Covered separately

Fences and Walls

- ZORC favors fencing and hedges for curb appeal, better articulation of private vs. public realm, with privacy but not complete visual barricade

- New. Maximum height at 4 feet. Fences 75% open. Streetscape value.

- Somewhat inconsistent treatment re: hedge height. Enforcement argument.

Front Yard Sculptures and Structures

- New. Response to anecdotal comments. 5 feet above grade. 10 foot area

Garages

New section requiring siting off the street for larger lots.

Goal: Improve front elevations and impart streetscape value.

Railings and Balconies

New:
- 50% open
- 4 foot minimum balcony dimension – imparts functionality and improves appearance

Cabanas

Goal: Eliminate disguised residence. Not to exceed 300 feet and no 220 volt service. No air conditioning. Reduces dependency on difficult enforcement.

Generators

- New. Staff Directed.

Ambient Light.

- New. Light sources must be directed so light remains within property boundaries.

Pool Pumps.

- New. We recommend a study on acoustical screening.

Helipad / Aircraft.

- New. We recommend proscribing helipads and private, non-military, non-emergency aircraft operations within specified areas. Discussion led to recommendation to study float-plane use.

***Commercial* - 30-101**

Include in purposes regulation of Development and Uses within the district.

Include Office as Main Permitted Use sub-set of Commercial. Limited Mixed-Use

For L'Esplanade and 240 Crandon, allow Commercial and Office mix as main permitted use. Abrogate restrictive covenants at L'Esplanade.

Entry way proposal: boutique hotel, subject to traffic management plan and architectural standards as to be determined. To facilitate this, recommendations include retaining Lot Coverage and footprint, increasing FAR from .5 to 1.0, and increasing height from 35 to 50 feet. Projected result: a 100 room (+/-) hotel, with retail and accessory uses at ground level; buffered from the surrounding area by Calusa Park and Harbor Plaza

***Governmental* – 30-102** – no change

***HR* – 30-103**

Notes on HR and Goals:

- Consensus on need for hotel and for better site plan
- Consensus on need to better protect Holiday Colony
- Attempt to guide consolidated project at Sonesta and Silver Sands and/or low intensity improvements, including 2nd story, at Silver Sands
- Economic Straightjacket: We're immobilized on eliminating residential use altogether because of proposition that residential density must be allowed to subsidize a hotel. Study question.
- Pros and cons debate:
  - Does a hotel support the commercial sector?
  - What is the likelihood that a residential project will be an underused 2nd home community?
  - What is the likelihood that a largely primary-use residential project will evolve regardless of whether the initial use is as a second-home community?
  - Which use is less intense: residential or hotel?
  - Which use is better for Key Biscayne overall?

HR Recommendations:

- Establish Height Zones at 120 foot intervals. Zones 1 – 5. Step-down in height eastward toward Holiday Colony.

- Zone 1 adjacent to Holiday Colony at same height and limited to single family, townhouse or Hotel bungalows.

- Zones 2 – 4:

  - MF, Hotel or Both.

  - Plan A. Reduce Residential density from 16 to 12 if no Hotel. Hotel stays at 30.

  - Plan B. Mixed-Use Bonus Plan. Beginning Density @ 60 for Residential and 150 for Hotel, with density bonus apportioned among each use

  - FAR spread within Zones 2-4

  - Bonuses keyed to material "wants". Examples:

    - Dedication of public park in Zone 1
    - Dedications of park space within Village, especially:
      - Contiguous lots
      - Lots adjacent to GU
      - Bay front lots
    - Building separation
    - LEEDs certification
    - Streetscape improvements
    - Affordable Housing
    - Unified Site Plan

- FAR reduced approximately by 1/3

- 4 story height allowance in Zone 2 to spread densities for better site plan - insignificant height difference, visually.

***Institutional.* 30-104**

Include "regulate Development and Uses".
Include historical and cultural Uses.

***MF District* – 30-105**

- "Include "regulate Development and Uses.
- Suggest consideration of Grand Bay, Key Colony and Ocean Club redevelopment.
  - Comp Plan: density / intensity equivalence on development

- Question this -- Goal of No surprises. Recommend make clear applicable standards upon re-development
- District uniformity in height at MF-16.

***Office* - 30-106**

- Include "regulate Development and Uses".
- Include Commercial / retail as Main Permitted Use along with Office.

Other:

30-113. Clarification re Prohibited Uses. If not identified as Permitted, then, prohibited.

30-114. Lawful Non-conforming uses. Moved.

ARTICLE VI
CONCURRENCY

30-161. Application. Provide that permit application includes a compliance statement from the Developer.

30-163. Refer to Comp Plan for LOS standards.

ARTICLE VII
OFF-STREET PARKING AND LOADING

No changes

ARTICLE VIII
SIGNS

Recommend that logos be permitted as a "secondary" sign in an area up to 144 square inches, but prohibited as a main permitted sign.

Recommend that monument signs be prohibited.

As noted in Article III, recommend no sign variances.

Recommend further look at need for numerous definitions.

ARTICLE IX
LANDSCAPE REGULATIONS

30-230 Strengthen purpose by referring to enforcement; invasives by reference to Exotic Pest Plan Council; and growth potential and propensity to damage infrastructure

30-232 Broaden requirements of landscape plans, including methods to protect landscaping during construction

30-233 Protection of Specimen Trees. Stronger requirement of sidewalk shade

30-234 Irrigation exceptions for drought-tolerant xeriscaping

30-236 Protection of root ball during construction

30-238 Minimum Standards. Minimum canopy, 40% palm tree limitation emphasizes shade trees, plus minimum height, minimum standards in single family and duplex districts

30-239 Hat racking Prohibited. Refer to National Arborist Association standards. ZORC discussion: special permit; certification?

ARTICLE X
LEGLISLATIVE

No changes

Other Suggestions

- Fonts and Formatting
- Graphics
- Other coding methods

SECTION IV
RECOMMENDED NEXT STEPS

- ***Roll-Out / Workshops***
  - Critical review by BPZ and Council
  - Final edits
  - Introduction to the Community
    - Explain What and Why

- Explain Why its Better
- Feedback
- Review vs. Redo?

- ***Sustainability – Green Initiatives***

  - Green Building Ordinance – Draft submitted
  - Basha Hicks Draft based on ZORC meetings and attendance at Miami-Dade County Model Green Ordinance Workshop
  - Look at Best Practices
    - Separate pick-up and composting for gardening and organic waste
    - conservation efforts, water management, cistern use, alternative energy generation measures, etc.
  - Look at LEEDs standards and bonuses
  - Look at TDRs
  - Recommend Mixed-Use - Entrance Block and C, O Districts (but no residential absent TDR)

- ***Standing ZORC or Successor***

  Rationale:

  - Finish this work. Facilitate education and review process
  - Retain and leverage hard-earned technical expertise and understanding of **Cause and Effect** – This is a major advantage
  - Advise, assist the Manager relative to his review functions and the Council
  - Think Thank benefits –
    - Comp Plan and Zoning assessments
    - FAR Bonuses / ARB
  - Divert political steam so topics and projects can be assessed and the Code administered dispassionately, and to help with transparency and public confidence
  - Trend in Florida
  - Empanelled and knowledgeable pessimists: better chance at catching problems

  Criteria:

  - Professional background, while relevant, is a misleading indicator
  - Knowledge of the Community
  - Dedication to Public Service
  - Technical expertise, but more…
    - Understand zoning tools and cause and effect
    - This is not a given in an architect, developer, real estate professional or lawyer – It can be and must be learned

- ***Consider Zoning In Progress***

- ***Map and Follow The Road Not Taken:***

  - Other code-writing techniques – more effective LDRs
  - Modified Form-Based Coding
  - Deemphasize Text and Tables - Extensive Graphics
  - Population sustainability – affordability
  - ARB – How to do it without Big Brother?

2335803-7

STAFF SUMMARY

OF THE

ZONING ORDINANCE REVIEW COMMITTEE RECOMMENDATIONS

This Executive Summary of the ZORC's recommended amendments to the Zoning and Land Development Regulations is composed of the following attached documents:

1. ZORC Report and Recommendations, Franklin, H. Caplain, Chair, ZORC. This 22 page report summarizes the goals and objectives that the ZORC established. It also summarizes in bullet format the changes that were made to each article in the ordinance.

2. Ordinance with the "comments". This document briefly describes through the use of "balloon comments" in the margin each of the 288 changes that are recommended by Staff, the Village Attorney, and the ZORC.

The ZORC recommended changes fall into the following categories:

1. Substantive changes which affect the design and proportionality of single family homes. These are explained in greater detail under the bold heading.

2. Administrative and regulatory changes dealing with process, clarifications, and purpose.

3. Grammatical edits, improved readability, and consistency.

Item 1 is addressed below. Items 2 and 3 are addressed in the attached ordinance through the use of "balloon comments: in the margin.

1. Substantive changes which affect the design and proportionality of single family homes.

This section focuses on those recommended changes that significantly affect the appearance of buildings. There was a general dissatisfaction with building mass, design, and proportionality of new construction occurring next to Mackel Homes.

Since the ZORC was opposed to establishing an Architectural Review Board, it set forth regulations that address structural elements of the building.

Revision 1: Maximum Floor Area Ratio (FAR) - in general the air-conditioned space was kept at .47. A Gross Floor Area was proposed at .65. The areas that are not counted in the Maximum FAR but now count between .47 to .65 are

balconies, porches, garages, and carports; however, the floor area in the attic is not counted.

Since the aforementioned spaces were not counted, the architect had the ability to add these spaces without a size limit as long as they met the setbacks and lot coverage requirements.

Revision 2: Maximum number of full stories was reduced from three to two; however, a third floor was permitted but the size is limited to 15% of the sq. ft. of the first two floors but not to exceed 600 sq. ft., whichever is smaller. The maximum height of the second story tie beam was reduced from 35 ft. to 27 ft.

The reduction in floors and the maximum wall height will reduce the overall mass of the structure and have a lesser proportional impact on surrounding smaller structure.

Revision 3: The maximum height of the lowest finished floor, including the entry landing, is proposed to be the Base Flood Elevation (BFE). In the past, architects would design these spaces at higher elevations which appeared to increase the height of buildings but in reality were within the 35 ft. height limit.

This change will also prevent the illegal construction of floor space below the finished floor. By increasing the height of the finished floor, the space below to grade becomes habitable. When viewed from the street two and three story buildings appear as three and four story buildings.

Revision 4: The maximum height of a wall is 22.5 ft. The present regulations do not require setbacks or designs that add visual interest. There are several proposed regulations which address indenting portions of an exterior wall, require openings for windows, and the provision of architectural features.

Revision 5: Most of the lots in the Village are 75 ft. wide. Waterfront lots and those non-waterfront lots on Mashta Island and in Holliday Colony are 100 ft. wide. The extra 2500 sq. ft. of lot area adds another 1,175 sq. ft. of floor area with a 7.5 ft. setback. By increasing the sideyard setback to 15 ft., the distance between two newly constructed homes is 30 ft. as

opposed to 15 ft. This additional 15 ft. of open space permits light and air and reduces that "closed-in" feeling that results from the smaller setback; however, there is no reduction in the total sq. ft. that can be built.

Revision 6: The current code does not address the location of a garage. The proposed code requires garage entrance not to face a street if the lot is 85 ft. wide or larger. The wall facing the street will have a window and finishes that match the home.

On page 13 of the Chair's report, there is an inventory of 20 changes that support the purposes of the substantial changes listed above. For convenience, these are listed below:

1. We clarify starting or base FAR as distinct from maximum FAR, which is achieved through FAR Bonuses.

2. We tinker with the FAR Bonuses to get to maximum FAR.

3. We establish a new Gross FAR standard to define gross "building envelope" including everything that contributes visually to mass.

4. We added porch dimensions for FAR Bonus – visually better and more functional.

5. We changed Front and Rear Setback bonuses to push structure forward – better streetscape and larger private realm; better buffering for neighbors.

6. We increased bonus for garages not facing the street.

7. We added bonus for roof line variety. Encourages more than one plane for visual interest. Reaction to the monolithic block design and build. But, residual ZORC concern and Road Not Taken: beware of McMansion effect.

8. We added bonuses for some architectural detailing – reveals and moldings. But, residual ZORC concern and Road Not Taken: McMansion effect.

9. We added a maximum height qualification to better provide for limited habitable space above a second story. Encourages attic space planning.

10. We added exterior Wall step-backs and better treatment for balconies and terraces. Visual interest, mitigate against the monolithic. But, residual ZORC concern and Road Not Taken: McMansion effect.

11. We added an "openness" design requirement at and above 22. 5 feet. Less uninteresting, uninterrupted mass. Mitigate against the monolithic. But, residual ZORC concern and Road Not Taken: privacy and McMansion effect.

12. We specify architectural design projections at 22.5 feet. Encourage less uninteresting, uninterrupted mass. Mitigate against the monolithic. But, residual ZORC concern and Road Not Taken: privacy and McMansion effect

13. We fix maximum elevation of the lowest finished floor and of main entrance at Base Flood Elevation. Improves height relative to grade and street, and consistency and proportionality among neighbors. Better visual and design conception at streetscape by making front entrance obvious as such.

14. Unlike the McMansion concerns, this is widely seen at ZORC as a very good idea.

15. We tweak allowances for roof ornaments and parapets.

16. We fix grade of a driveway at no more than 20% above the crown of the road.

17. We think this has an important streetscape value.

18. We simplify setback regulations, eliminating unneeded distinction between IR Zoning District (interior and waterfront properties).

19. We increase setbacks on larger lots – better separation, better privacy, more pervious space

20. We allow 1 story additions to follow existing Wall line. 2 story additions are subject to the height step-backs we've recommended.

In addition to the above, the ZORC amended regulations for the following items: fences and walls, railings, and balconies, cabanas, emergency generators, ambient light source, signs and docks and mooring piles.:

1. Fences and Walls. The goal was to screen fences and walls when they face a street and create as open as possible yard. The maximum height was set at 4 ft. and use of materials that result in being at least 75% open with hedges in front. The current regulations permit 6 ft. walls facing a street with no "openness requirement".

2. Railings and Balconies. The goal was to have these as open as possible to reduce the mass of the overall building. Balcony walls/railings must be 50% open with a minimum width of 4 ft. to create visual interest. The current regulations do not regulate an "openness requirement".

3. Cabanas. The goal was to prevent these from being built to accommodate overnight or longer residential use. The regulations prevent A/C, limit their size to 300 sq. ft, and prevent 220 volt service from being installed. The latter will prevent ovens from being placed in the cabanas. The current regulations do not limit their size.

4. Emergency Generators. The current code did not regulate these. The new regulations establish hours of used setback and locations.

5. Ambient Light Source. All light must be kept on the premises. We use the County Code for this provision.

6. Signs. Variances for signs are not permitted. Monument and V-shaped signs are prohibited. Presently, all of these are permitted.

7. Docks and Mooring Piles. The ZORC recommended that dock regulations be established for the canals, Hurricane Harbor, and Smuggler's Cove. The Council has adopted specific regulations for waterfront properties from 200 – 398 Harbor Drive and those along Biscayne Bay. Lastly, there are general regulations that apply to all of these areas. The attached table compares the regulations for each of these areas. These changes do not address special situations where properties have a sandy beach in the 400 block along Bay Lane or for properties on S. Mashta Drive where the water level is so low that DERM requires docks to project 80+ ft. and while our code has a limit of 40 ft.

Note: The ZORC's HR Hotel Resort recommendations are not included in the ordinance for second reading, because they have already been considered by the Village Council and removed.

Motion: Reconfigure the Village's dock regulation to eliminate the D-5 portions and use setbacks as a primary control mechanism.

On the D-5 triangle and boat regulations.

- No other community uses the D-5 triangle or any triangle to determine the location of docks.
- No other community uses the D-5 triangle or any other triangle to determine where a boat can be docked.
- The most widely used regulations use setbacks as a primary method of control.
- On a typical Key Biscayne canal lot, which is 100 feet wide, the largest boat that can fit inside a D-5 triangle is 56 feet.
- A 20 foot set back from either side would, at most, allow a 60 foot boat, practically the same. Reasonable?
- On any irregular lot, however, the D-5 regulations often create significant restrictions.
- On many non canal waterfront lots, due to DERM and other agency's regulations, the D-5 restrictions make having a conforming dock and boat combination impossible.
- Most of these properties currently have nonconforming docks and boats. If a storm or regular decay was to significantly damage a dock, the property owner would not be able to get a permit to rebuild and their ability to have either a dock or a boat would become impossible.
- What is the Village's policy position on the right of waterfront property owners to reasonably use their property and have a boat?
- Specifically, does the Village believe that a waterfront property owner has the right to use the waterways to dock a boat?
- Which is the primary right, to allow boat dockage or to maintain view corridors?
- Recently, a group of homeowners along Harbor Drive filed suit against the Village to change the D-5 regulations to allow them the right to place docks and boats outside the D-5 triangle. Due to DERM and other regulations, it was the only way that they could legally use their waterfront to place a dock and a boat behind their properties. These property owners understood that in doing so, they would restrict their own view corridors, but that was necessary in order to allow them to have a dock and a boat.
- The Council agreed that these changes were reasonable and necessary and affirmed these homeowner's right to have a dock and a boat behind their properties by changing the code. Did this action set policy for the Village? Possibly, but not clearly enough.
- Does the right of a neighbor to have view corridors trump the right of an owner to reasonably use their waterfront to have a dock and a boat?
- Setbacks, without the D-5 triangle, protect both the primary homeowner's rights and the reasonable expectation of neighbors to view corridors.

VILLAGE OF KEY BISCAYNE

Office of the Village Manager

Village Council
Robert L. Vernon, *Mayor*
Enrique Garcia, *Vice Mayor*
Michael W. Davey
Robert Gusman
Michael E. Kelly
Jorge E. Mendia
Thomas Thornton

Village Manager
Genaro "Chip" Iglesias

MEMORANDUM

DT: August 18, 2010

TO: Honorable Mayor and Members of the Village Council

FR: Genaro "Chip" Iglesias, Village Manager

RE: Watercraft and Dock Regulations

Councilmember Mendia requested the attached drawings be provided for the meeting to illustrate the following:

1. Current regulations with the 45 degree triangle and the 10 ft. setback.
2. Impact when the triangle is removed and replaced with larger setbacks.

Also, attached is a table that compares the current regulations with those used by Miami Beach, Coral Gables, Longboat Key, Jupiter Beach, and Ft. Lauderdale.

88 West McIntyre Street • Suite 210 • Key Biscayne, Florida 33149 • (305) 365-5500 • Fax (305) 365-8936
MISSION STATEMENT: "TO PROVIDE A SAFE, QUALITY COMMUNITY ENVIRONMENT FOR ALL ISLANDERS THROUGH RESPONSIBLE GOVERNMENT."
www.keybiscayne.fl.gov

COMPARISON OF WATERCRAFT AND DOCK REGULATIONS

	Key Biscayne	Miami Beach	Coral Gables	Longboat Key	Jupiter Beach	Ft. Lauderdale
Triangle/Degree	Yes/60 on 200-398 Harbor Dr.; otherwise 45.	No	No	No	No	No
Inside Triangle:						
Boats?	200-398 Harbor Dr. no; otherwise yes	NA	NA	NA	NA	NA
Mooring Piles?	200-398 Harbor Dr. no; otherwise yes.	NA	NA	NA	NA	NA
Docks?	Yes	NA	NA	NA	NA	NA
Setback From Side Property Lines Extended into Waterway	10'	7.5'	25'	15'	District side setback extended into waterway.	District side setback extended into waterway.
Boat Size Regulation	200-398 Harbor Dr. 50' length; otherwise within triangle.	No	No	No	No	No
Maximum Dock Projection	200-398 Harbor Dr. 40', Biscayne Bay 25'; otherwise 10' or 10% of waterway width, whichever is less.	By DERM reg's.; > 40' into waterway requires Conditional Use approval.	25'	50' into open water; otherwise 30% of channel width or 30', whichever is less.	Natural waterway: max. 50' from the mean high water line or 20% of the waterway width, whichever is less. Man-made surface waters (i.e. lakes, retention ponds or canals: 5' or 10% of waterway width, whichever is less.	10% of waterway width or 20', whichever is less.
Maximum Mooring Pile Projection	200-398 Harbor Dr. 20' from dock, 55' max. on center, Biscayne Bay 25' from bulkhead Otherwise = lesser of 20 from dock or 25% of waterway width	Per DERM reg's. > 40' into waterway requires Conditional Use approval.	20' beyond dock	Same as docks	Same as docks, but on man-made surface waters > 50' wide, mooring piles may project 25% of width.	5' into waterways of 50' width or less; otherwise, 30% of the waterway width or 25' beyond the property line, whichever is less.

100' WIDE LOT
(CURRENT REGULATION)

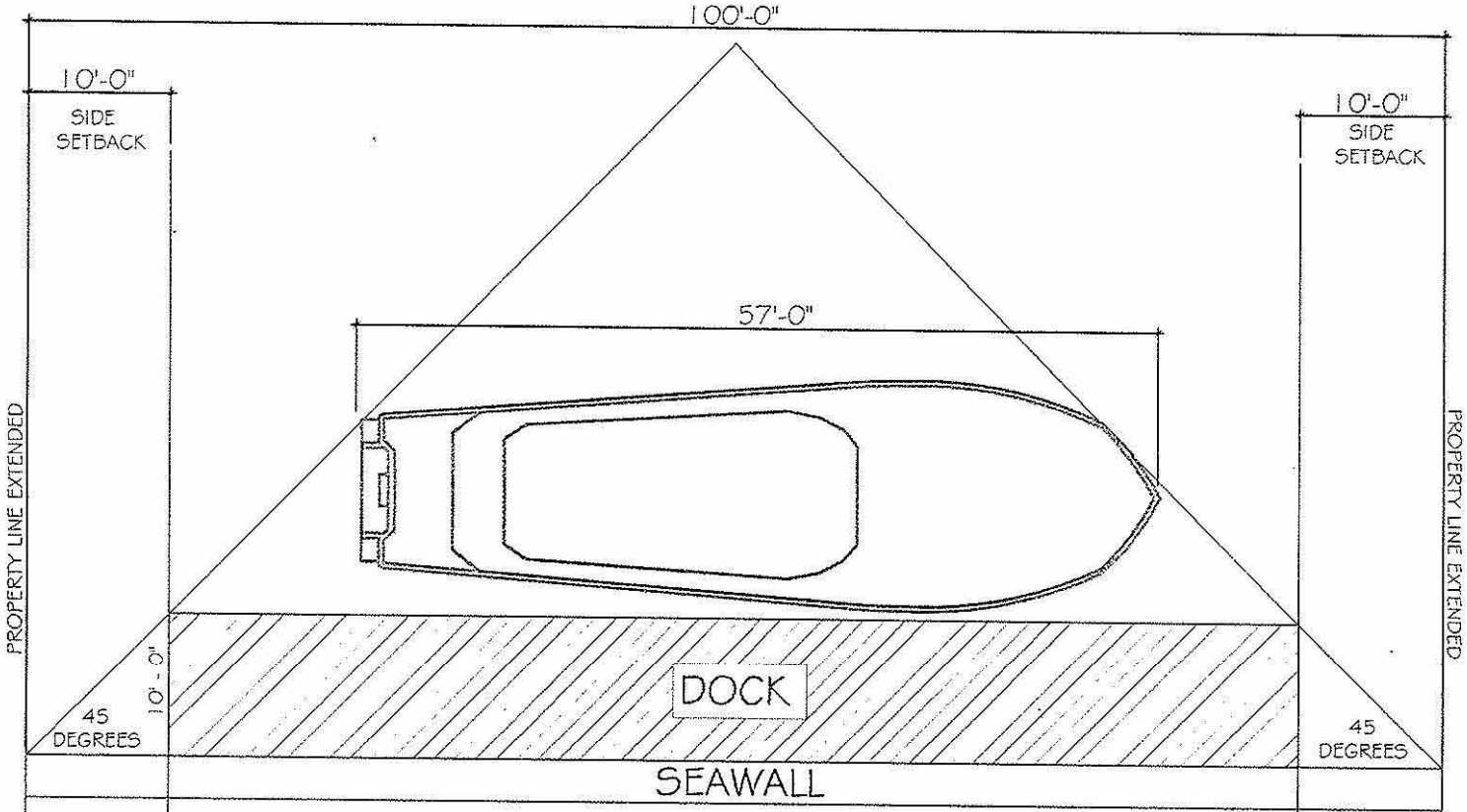

45 Degree Triangle
10' Dock & 10' Side Setbacks

100' WIDE LOT

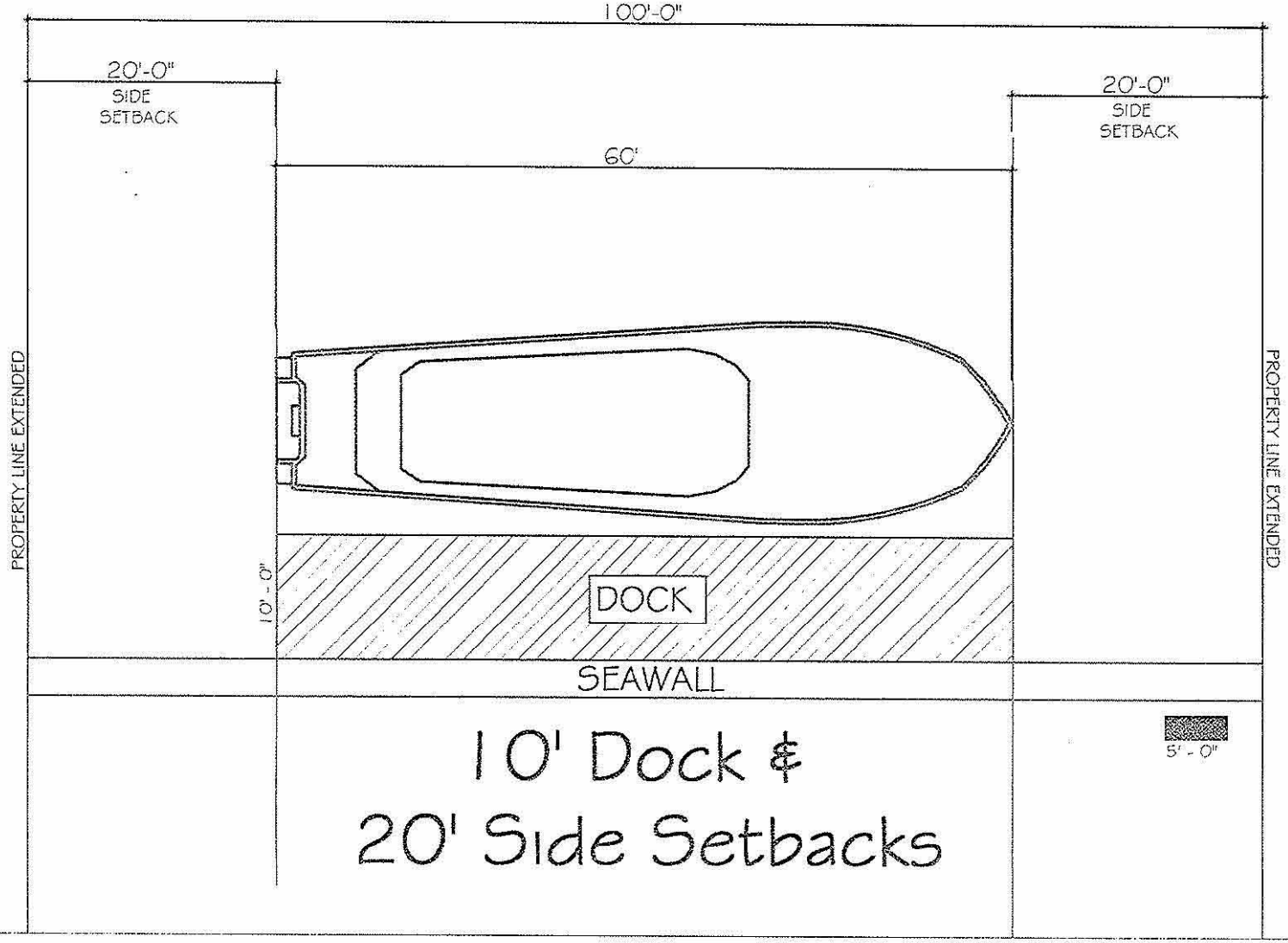

10' Dock & 20' Side Setbacks

100' WIDE LOT

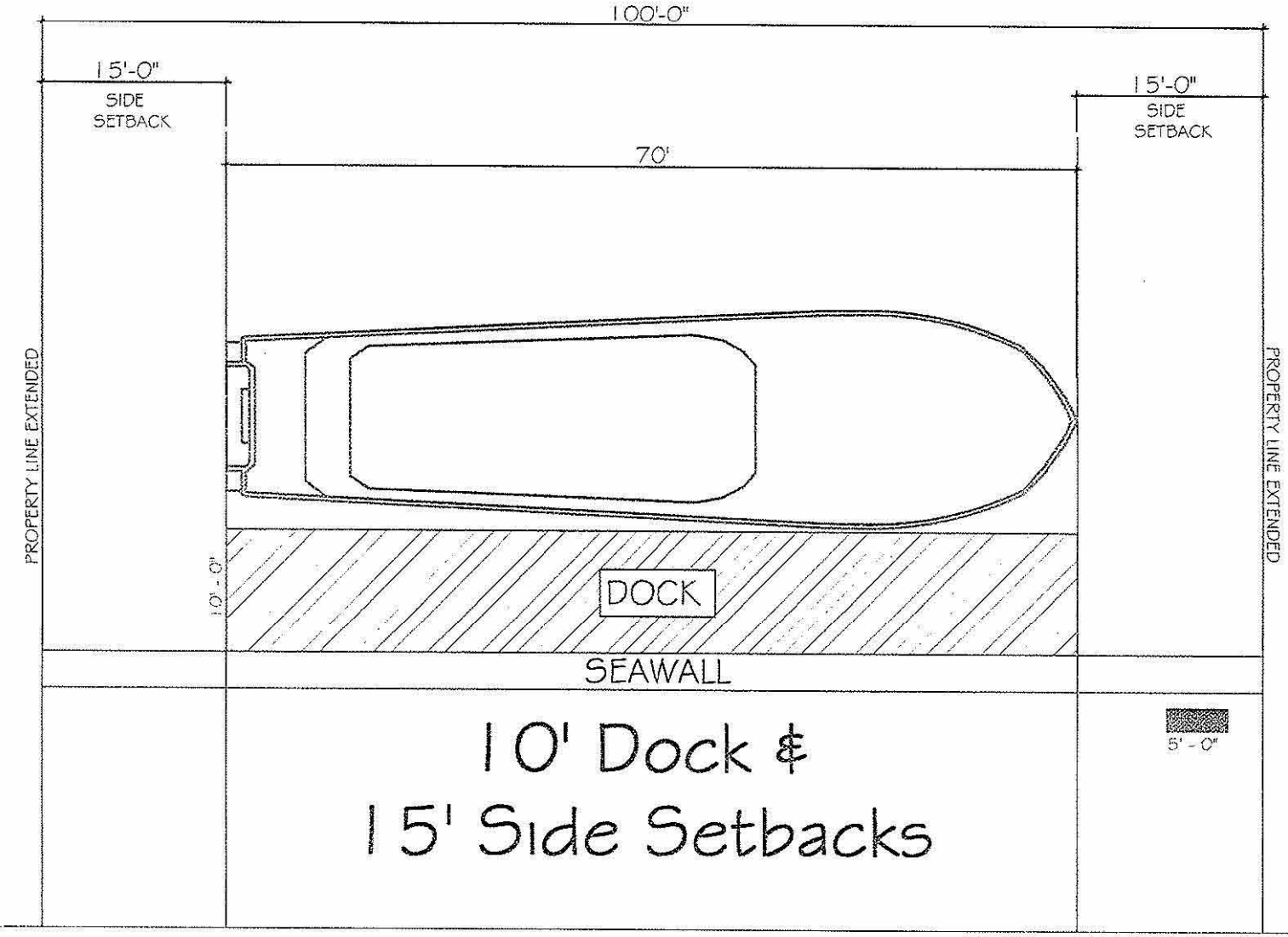

10' Dock &
15' Side Setbacks

100' WIDE LOT

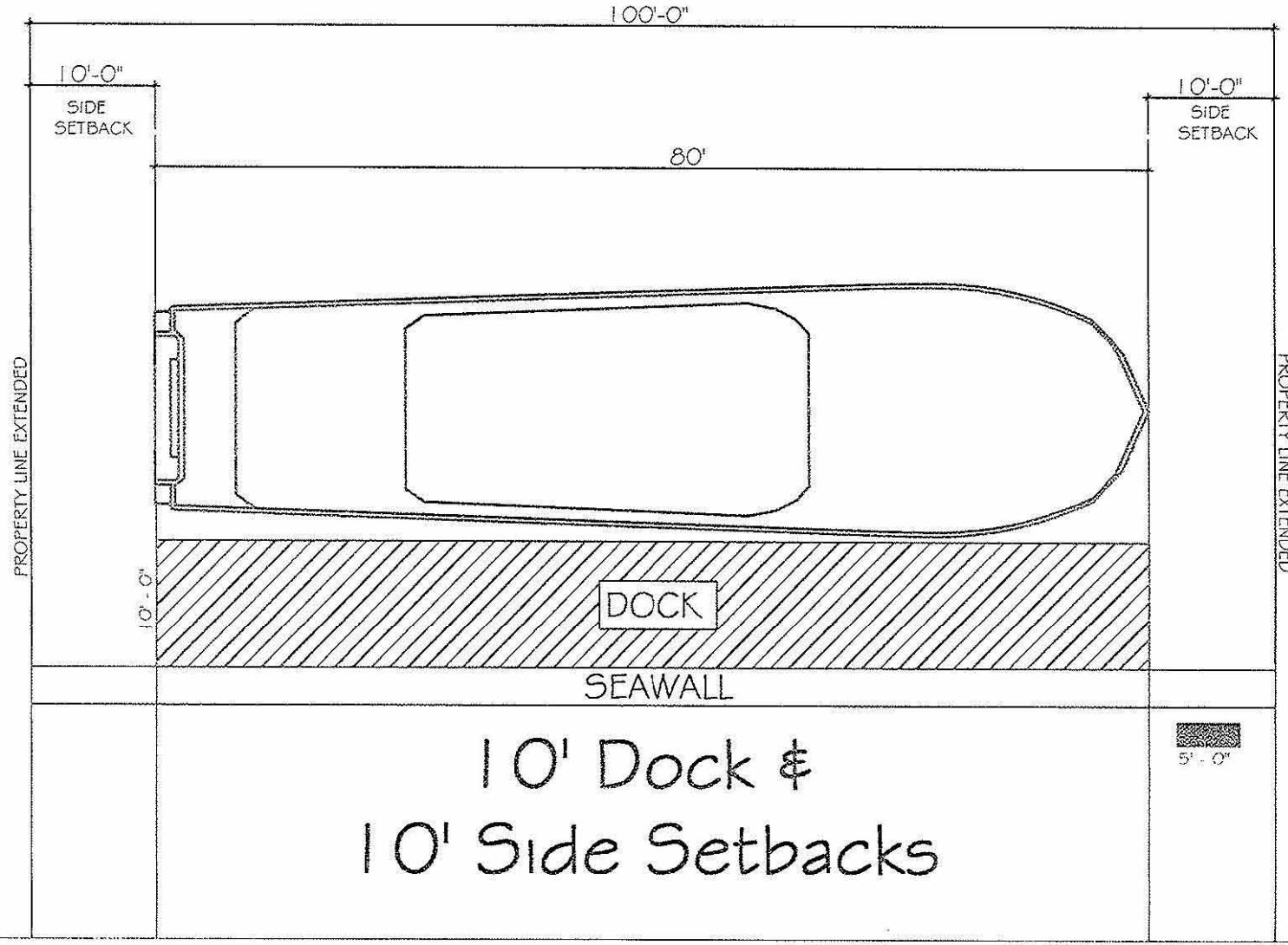

10' Dock &
10' Side Setbacks

COMPARISON OF WATERCRAFT, DOCK, AND MOORING PILE REGULATIONS BY LOCATI

REGULATION	CANALS	HURRICANE HARBOR AND SMUGGLERS COVE	BISCAYNE BAY	200 - 398 H
1. Minimum setback for docks, fenders, watercraft, mooring piles.	10 ft. from property line extended into the water.	10 ft. from property line extended into the water.	10 ft. from property line extended into the water.	10 ft. from extended into
2. Maximum mooring height.	13 ft. NGVD.	13 ft. NGVD.	13 ft. NGVD.	13 ft. NGVD.
3. Maximum number of slips per residence.	2 slips. Slips occupied by guests may be moored no longer than 24 hours.	2 slips. Slips occupied by guests may be moored no longer than 24 hours.	2 slips. Slips occupied by guests may be moored no longer than 24 hours.	1 slip. A slip a guest may no longer tha
4. A tender shall not be considered as a watercraft.	Yes.	Yes.	Yes.	Yes.
5. Minimum distance from a dock to a jetty or breakwater.	50 ft.	50 ft.	50 ft.	60 ft.
6. Minimum distance from a dock to a marked channel.	25 ft.	25 ft.	25 ft.	25 ft.
7. Boat lift regulations.	A boat lift may project from a dock within the applicable 45 or 60 degree triangle, but shall not encroach into the required minimum 10 ft. side yard setback.	A boat lift may project from a dock within the applicable 45 or 60 degree triangle, but shall not encroach into the required minimum 10 ft. side yard setback.	A boat lift may project from a dock within the applicable 45 or 60 degree triangle, but shall not encroach into the required minimum 10 ft. side yard setback.	A boat lift from a dock applicable 4 degree triang not encroach required mini side yard setb

8. Boat lift arms regulations.	Boat lift arms may extend beyond the applicable 45 or 60 degree triangle, but shall not extend beyond the mooring piles.	Boat lift arms may extend beyond the applicable 45 or 60 degree triangle, but shall not extend beyond the mooring piles.	Boat lift arms may extend beyond the applicable 45 or 60 degree triangle, but shall not extend beyond the mooring piles.	Boat lift extend be applicable degree trian not extend mooring piles
9. Maximum height for a watercraft on a boat lift.	The keel shall be no more than five inches above Mean High Water Level.	The keel may be no more than five inches above Mean High Water Level.	The keel may be no more than five inches above Mean High Water Level.	The keel more than above Mean Level.
10. Maximum dock extension from a property line into the water.	10 ft. or 10 % of the width of the waterway whichever is less.	20 ft. or 10% of the width of the waterway whichever is less.	40 ft.	40 ft. If the is a concav arc, the proj side of the exceed the dock projecti
11. Maximum extension of a mooring pile from the property line into the water.	25 ft. or 20 % of the waterway, whichever is less.	35 ft. or 20% of the width of the waterway, whichever is less.	60 ft.	60 ft.
12. Maximum Distance from a mooring pile to a dock.	Not regulated.	Not regulated.	20 ft.	20 ft.
13. Dock or watercraft or mooring piles shall fit within the applicable 45 or 60 degree triangle.	Yes, all within 45 degree triangle.	Yes, all within 45 degree triangle.	Only dock and watercraft are required to be inside a 60 degree triangle.	Only dock ar are required a 60 degree t

14. Maximum length of baseline of the triangle.	Not regulated.	Not regulated.	100 ft.	100 ft.
15. Fender piles regulations.	When the width of the waterway does not permit the placement of a dock or outer mooring pile, fender piles may be placed at a distance not to exceed 18 in. from the bulkhead.	When the width of the waterway does not permit the placement of a dock or outer mooring pile, fender piles may be placed at a distance not to exceed 18 in. from the bulkhead.	When the width of the waterway does not permit the placement of a dock or outer mooring pile, fender piles may be placed at a distance not to exceed 18 in. from the bulkhead.	When the w waterway permit the pla dock or ou pile, fender p placed at a to exceed 18 bulkhead.
16. Maximum length overall (LOA) of a watercraft.	Not regulated.	Not regulated.	Not regulated.	50 ft.
17. Maximum distance between mooring piles.	Not regulated.	Not regulated.	Not regulated.	50 ft.
18. Maximum length of a dock running parallel to the property.	Not regulated.	Not regulated.	Not regulated.	50 ft.