VILLAGE OF KEY BISCAYNE

**Office of the Village Manager**

MEMORANDUM

*Village Council*
Franklin H. Caplan, *Mayor*
Michael E. Kelly, *Vice Mayor*
Michael W. Davey
Enrique Garcia
Robert Gusman
Mayra P. Lindsay
James S. Taintor

*Village Manager*
John C. Gilbert

DATE: April 10th, 2012

TO: Honorable Mayor and Members of the Village Council

FROM: John C. Gilbert, Village Manager

RE: Village Green Tot Lot Barrier Wall

RECOMMENDATION

It is requested that the Village Council review the project and provide authorization to the Village Manager to proceed with the permitting, biding and construction management for the proposed tot lot barrier. Should Village Council choose not to move forward with this project the Village Manager is requesting removal of this item from the 2012 Capital Improvement Plan.

BACKGROUND

On April 27th, 2010, the Village Council directed the Village Manager to investigate the feasibility of placing a barrier around the Village Green tot lot due to the safety issues created by the proximity of the adjacent roadways and sidewalk.

On September 7th, 2010 the Village Council approved Resolution 2010-38 authorizing Corzo Castella Carballo Thompson Salman, P.A. (C3TS) to perform owners representation, construction project management, administration and inspection services for construction of a 30" high seating wall along the northwest and southwest perimeters of the existing playground to serve as a barrier for the adjacent roadways and sidewalks. The Village Council requested that a lighting element be added to the scope of this project.

This project was put on hold while the 530 Crandon project was being considered. The project included elements that may have impacted the location and functionality of the wall if easements were vacated, the location and size of the adjacent traffic circle was modified, or if an additional parking area was to be added to the north end of the Community Center adjacent to the playground.

This item returned before the Village Council on February 7th, 2012 to seek additional direction on the lighting component added to the scope of project. The Village Council was not in favor of the lighting component of the project.

The estimated total project cost funded by the FY12 CIP is $125,000.

| PROJECT No | SHEET No |
|---|---|
| 01108-028 | CO |
| CADD FILE # \01108-028 | |

# VILLAGE GREEN TOT LOT ENCLOSURE

## VILLAGE OF KEY BISCAYNE, FLORIDA

C3TS PROJECT No. 01108-028

INDEX OF SHEETS


| SHEET NO. | DESCRIPTION |
|---|---|
| CO | COVER SHEET |
| C1 | GEOMETRY AND DEMOLITION PLAN |
| L1 - L2 | LANDSCAPING PLAN AND DETAILS |
| S1 | SITTING WALL STRUCTURAL PLAN |

NTS

PROJECT LOCATION

LOCATION MAP

N.T.S

MARCH, 2012

MAYOR & COUNCIL:

Franklin Caplan, Mayor
Michael E. Kelly, Vice Mayor
Michael Davey, Councilmember
Enrique Garcia, Councilmember
Robert Gusman, Councilmember
Mayra Pena Lindsay, Councilmember
James Tointor, Councilmember

Village Manager: John C. Gilbert

Village Attorney: Weiss, Serota, Helfman, Pastoriza, Cole & Boniske, P.A.

Village Clerk: Conchita H. Alvarez

Public Works Director: T.B.A.

American Consulting Engineers Council Member
Supporting Excellence in Engineering


CORZO CASTELLA CARBALLO THOMPSON SALMAN, P.A.
ENGINEERS · ARCHITECTS · PLANNERS
901 PONCE DE LEON BLVD SUITE 900
CORAL GABLES, FLORIDA 33134
MIAMI (305)-445-2900 FLORIDA (800)-448-8227


811

APPROVED BY

Diana Sudasassi Bilbao, P.E.
REGISTERED ENGINEER NO. 36075
STATE OF FLORIDA

DATE

| APPROVALS | | | |
|---|---|---|---|
| AGENCY | SUBMITTAL DATE | APPROVAL DATE | PERMIT NUMBER |
| | | | |
| | | | |

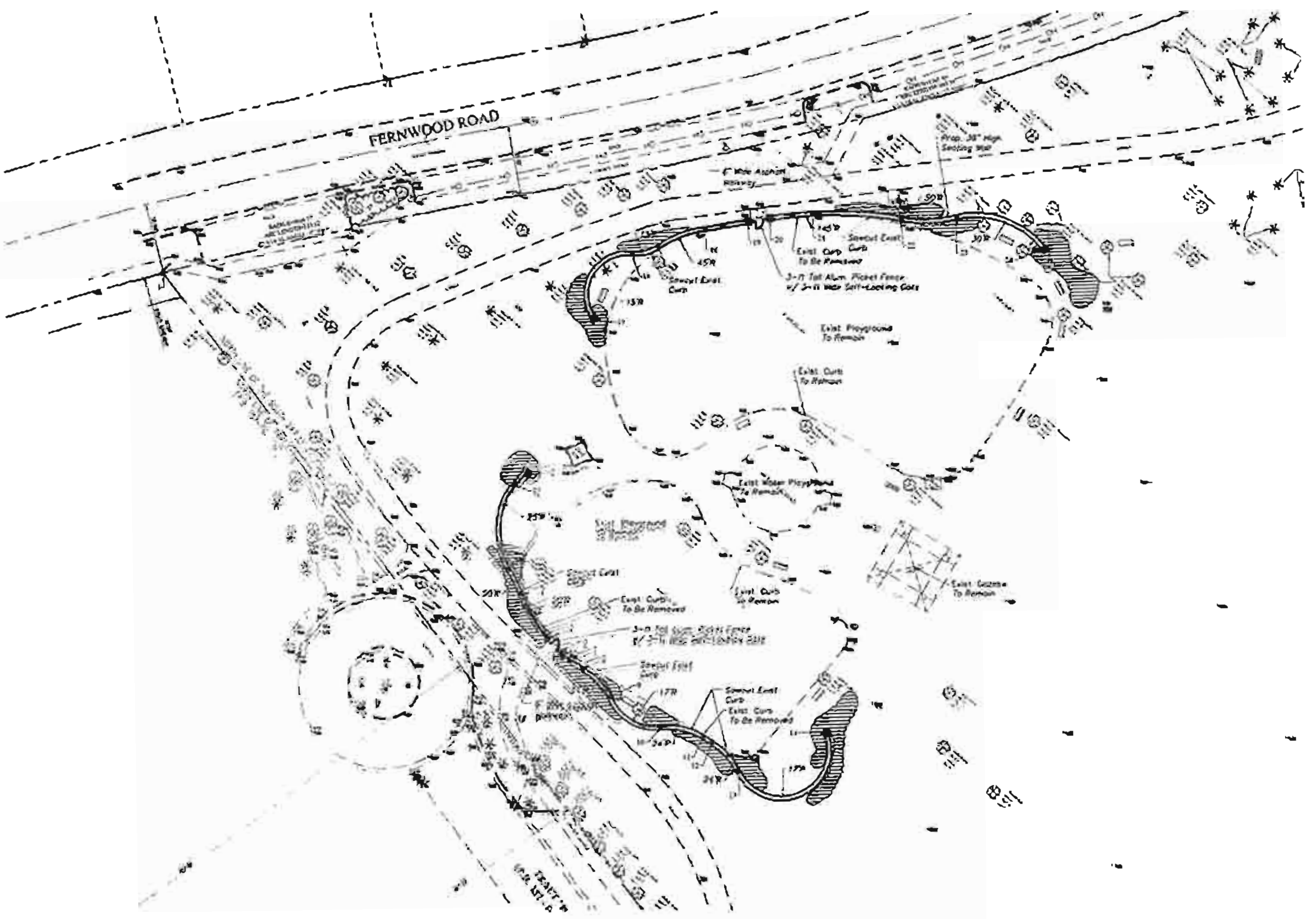


Scale: 1" = 20'
(Reduced Scale: 1" = 40')

0 10 20 40

CONSTRUCTION NOTE:

Location of existing facilities as shown on construction drawings are from available records. The Engineer assumes no responsibility for the accuracy of the facilities shown or for any facility not shown. Verify the elevation, type of pipes and location of existing facilities prior to construction. If an existing facility is found to conflict with the proposed construction upon excavation the contractor shall immediately notify the engineer of record so that appropriate measures can be taken to resolve the problem. Contractor to notify Village of Key Biscayne and Sunshine State One Call of Florida, Inc. @ 1-800-432-4770 at Least Forty Eight (48) Hours Prior to Excavating. Evidence of such notice shall be furnished to C3TS prior to excavating.

811 ALWAYS CALL 811 BEFORE YOU DIG

Point Table

| Point # | Raw Description | Northing | Easting |
|---|---|---|---|
| [illegible] | CL Sitting Wall | 49997.16 | 50207.68 |
| 18 | CL Sitting Wall | 50120.46 | 50420.38 |
| 24 | End Cap Pillar | 50221.32 | 50229.35 |
| 1 | Reference Point | 50000.00 | 50000.00 |
| [illegible] | CL Sitting Wall | 49995.07 | 50270.10 |
| 11 | CL Sitting Wall | [illegible] | [illegible] |
| 25 | CL Sitting Wall | [illegible] | 50145.11 |
| [illegible] | End Cap Pillar | [illegible] | [illegible] |
| 10 | CL Sitting Wall | [illegible] | [illegible] |
| [illegible] | CL Sitting Wall | [illegible] | [illegible] |
| [illegible] | CL Sitting Wall | [illegible] | [illegible] |
| [illegible] | CL Sitting Wall | [illegible] | 50252.50 |
| [illegible] | End Cap Pillar | 50167.78 | [illegible] |
| [illegible] | CL Sitting Wall | [illegible] | [illegible] |
| [illegible] | CL Sitting Wall | [illegible] | [illegible] |
| [illegible] | End Cap Pillar | [illegible] | [illegible] |
| [illegible] | End Cap Pillar | [illegible] | [illegible] |
| [illegible] | CL Sitting Wall | [illegible] | [illegible] |
| [illegible] | CL Sitting Wall | [illegible] | [illegible] |
| [illegible] | End Cap Pillar | [illegible] | [illegible] |

CL = Centerline

Point Table

| Point # | Raw Description | Northing | Easting |
|---|---|---|---|
| 14 | End Cap Pillar | [illegible] | [illegible] |
| 22 | CL Sitting Wall | 50195.38 | [illegible] |
| 7 | CL Sitting Wall | [illegible] | [illegible] |
| [illegible] | End Cap Pillar | [illegible] | [illegible] |
| [illegible] | CL Sitting Wall | [illegible] | [illegible] |

CL = Centerline

NOTE:

5-ft wide asphalt walkway extension shall be 6" lime rock base and 1-1/2" Type S-3 asphalt on compacted sub-base (LBR40)

GEOMETRY & DEMOLITION PLAN

| REVISIONS | | APPROVED BY: | | | | | | |
|---|---|---|---|---|---|---|---|---|
| DESCRIPTION | DATE | Diana Sudosaal Bilbao, P.E. No. 56926 | CORZO CASTELLA CARBALLO THOMPSON SALMAN, P.A. ENGINEERS · ARCHITECTS · PLANNERS | DATE: 03-22-12 | VILLAGE OF KEY BISCAYNE FLORIDA | VILLAGE GREEN TOT LOT BARRIER ENCLOSURE | 1106-20 | SHEET NO. C1 |
| 1. | | DATE: | C3TS | DRAWN: DSB | | | | |
| 2. | | | | DESIGNED: DSB | | | | |
| 3. | | | | CHECKED: RC | | | | |
| 4. | | | | QC: RC | | | | |
| | | | | CADD FILE: | | | | |

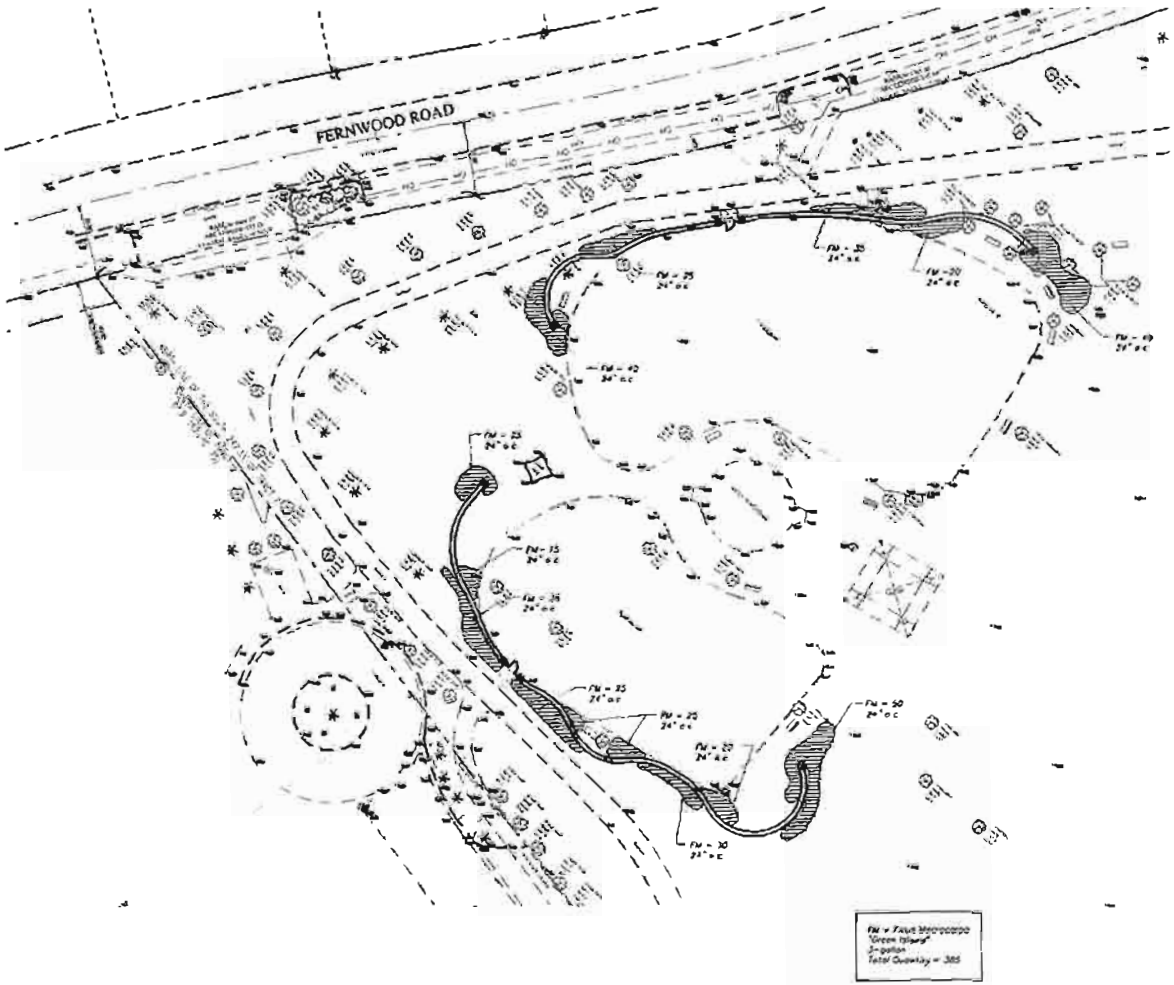


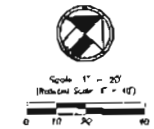


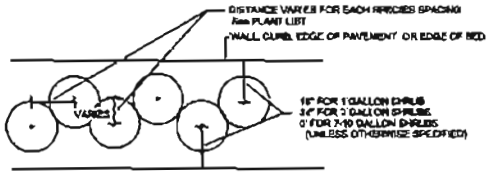


## SHRUB SPACING DIAGRAM

N.T.S.

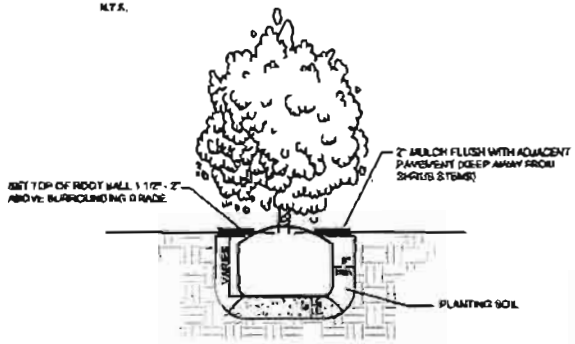


## SHRUB INSTALLATION DETAIL

N.T.S.

LANDSCAPING PLAN

| REVISIONS | | APPROVED BY: | CORZO CASTELLA CARBALLO THOMPSON SALMAN, P.A. ENGINEERS · ARCHITECTS · PLANNERS | DATE: 03-22-12 | VILLAGE OF KEY BISCAYNE FLORIDA | VILLAGE GREEN TOT LOT BARRIER ENCLOSURE | 1108-28 | SHEET NO. |
|---|---|---|---|---|---|---|---|---|
| DESCRIPTION | DATE | Diana Sudarsasi Shiraz, P.E. No. 56928 | | DRAWN: DSB | | | | L1 |
| 1. | | DATE | | DESIGNED: DSB | | | | |
| 2. | | | | CHECKED: RC | | | | |
| 3. | | | | QC: RC | | | | |
| 4. | | | | CADD FILE: | | | | |

LANDSCAPING SPECIFICATIONS
PART 1 - GENERAL

1.1 SCOPE

A. Contractor shall provide all labor, materials, equipment, watering, supervision, and related work necessary to complete the landscape work in accordance with the intent of the landscape plans, schedules and these specifications. The extent of work is shown on the drawings which are a part of this document.

1.2 INVESTIGATION OF UTILITIES

A. Prior to beginning work, the Contractor shall be responsible to locate existing underground utilities. Check with all utility companies and Sunshine State, call (1-800-432-4770)

1.3 SUBSTITUTIONS

A. Only materials specified will be accepted, unless approved in writing by the Landscape Architect in advance.

1.4 PLANT SIZES

A. All plant sizes shall equal or exceed the minimum sizes as specified in the plant list. When plant sizes are specified as a range of sizes, installed materials shall average the mean of the range specified. Plants shall be measured following pruning, with branches in normal position. All necessary pruning shall be done at the time of planting.

1.5 PLANT QUALITY

A. All plant material shall be equal to or better than Florida No. 1 as classified by "Grades and Standards for Nursery Plants" by the Division of Plant Industry, Florida Department of Agriculture. They shall have a growth habit that is normal for the species; healthy, vigorous, free from insects, disease and injury.

B. The Owner or Landscape Architect reserves the right to refuse any plant material which does not conform to the intent of the written specifications or design.

C. CIRCLING ROOTS FOUND ON CONTAINER-GROWN MATERIAL WILL NOT BE ACCEPTED UNLESS REMEDIAL ROOT PRUNING, APPROVED BY THE LANDSCAPE ARCHITECTURE IS DONE BEFORE PLANTING.

1.6 PLANT QUANTITY

A. The plant quantities shown on the plant list are to be used only as an aid to bidders. In the case of discrepancy between the plant list and the plan, the quantity on the plan shall override the plant list.

1.7 UNIT PRICES

A. The successful bidder shall furnish to the Owner and the Landscape Architect, a unit price breakdown for all materials. The Owner may, at his discretion, add to or delete from the materials utilizing the unit price breakdown submitted to and accepted by the Owner.

1.8 INSPECTION CERTIFICATES

A. Fertilizer: The Contractor shall submit to the Owner and Landscape Architect documentation that all the fertilizer used for the project is of the analysis specified and placed at the rates specified in section 2.2 FERTILIZER.

1.9 CLEAN-UP & MAINTENANCE OF TRAFFIC

A. Follow procedures in FDOT Index 600 for maintenance of traffic during construction.

B. At the end of each work day, the Contractor shall remove debris and shall barricade the un-filled holes in a manner appropriate in the path of pedestrians and motorists.

C. Upon completion of the work or any major portion of the work or as directed by the Landscape Architect, all debris and surplus material from his work shall be removed from the job site.

1.10 MAINTENANCE PRIOR TO ACCEPTANCE

A. The Contractor is responsible to maintain the plantings until they are accepted under the provisions of 1.11 "ACCEPTANCE".

1. Plants: Begin maintenance immediately following the final plant installation operation for each plant and continue until all plant installation is complete and accepted. Maintenance shall include watering all plants, weeding, mulching, pest and disease control, tightening and repairing of guys, repair of braces, removal of dead growth, resetting of plants to proper grade or up-right position, restoration of plant saucers and other necessary operations as determined by the Landscape Architect and good nursery practice.

2. Turf Areas: Begin maintenance of turf immediately following the placement of sod and continue until sod installation is complete and accepted. Maintenance shall include but not be limited to, watering, leveling, mowing, weed and pest control, fungus and disease control and other necessary operations as determined by the Landscape Architect and good nursery practice.

3. Re-setting or straightening trees and palms:
The Contractor shall re-set and/or straighten trees and palms as required at no additional cost to the Owner unless caused by sustained winds of 75 mph or more. Then, the costs of the operations may be charged to the Owner. Re-set trees within 48 hours.

1.11 OPERATIONS FOR ACCEPTANCE

A. Inspection: Inspection of the work, to determine completion of contract work, exclusive of the possible replacement of plants and turf, will be made by the Landscape Architect at the conclusion of the maintenance period. Written notice requesting such an inspection and submitted by the Contractor at least ten (10) days prior to the anticipated date.

1.12 GUARANTEE

A. Guarantee all shrubs for ninety (90) consecutive calendar days (CCD) from the date of acceptance. Guarantee Trees and Palms for a period of one year CCD. Guarantee shall commence from the date of written acceptance. Plant material which is on the site and scheduled to be relocated is not covered by the guarantee except in the case of Contractor's negligence or work that has been done in an unworkman-like manner. The Contractor is not responsible for loss due to acts of god, (i.e.) sustained winds of 75 mph or more, floods, frost, lightning, vandalism or theft.

1.13 REPLACEMENT

A. Replacements shall be made during the guarantee period as directed by the Landscape Architect within 2 weeks from time of notification. At the end of the guarantee period, inspection will be made by the Landscape Architect, upon written notice requesting such inspection and submitted by the Contractor at least five (5) days before the anticipated date. Remove from the site all plants that are dead or in a state of unsatisfactory growth, as determined by the Landscape Architect. Replace these and any plants missing due to the Contractor's negligence as soon as conditions permit.

1. Materials and Operations: All replacement plants shall be of the same kind and size as indicated on the plant list. The Contractor shall supply and plant the plants as specified under planting operations.

2. Cost of Replacements: A sum sufficient to cover the estimated cost of possible replacements, including material and labor will be retained by the Owner and paid to the Contractor after all replacements have been satisfactorily made and approved by the Landscape Architect.

PART 2 - MATERIALS

2.1 PLANTING SOIL

A. Planting soil shall be of the compositions noted in the plans measured by volume.

2.2 FERTILIZER

A. Fertilizer for trees, palms, shrubs, and groundcovers shall be as follows: LESCO Palm Special 12-3-13 or equal, Sulfur coated with iron and other minor elements and maximum of 2% chlorine, or brand with equal analysis. The fertilizer shall be uniform in composition, dry and free flowing and shall be delivered to the site in the original unopened containers, bearing the manufacturer's guaranteed analysis. Fertilizer for sod and seeded areas shall be 8-6-8, 50% organically derived nitrogen, or equal.

2.3 WATER

A. The Contractor shall provide potable water on site, available from the start of planting, as required by the Contractor. The Contractor is responsible to ascertain the location and accessibility of the water source. The Contractor is responsible to provide the means of distribution (i.e. water truck, hoses, etc.) for distribution of water to the planting areas.

2.4 MULCH

A. Mulch shall be as specified in the plant list, uniformly shredded and free from large pieces of bark and foreign matter.

3.0 PART 3 - INSTALLATION PROCEDURES

3.1 LAYOUT

A. Verify location of all underground utilities and obstructions prior to excavation.

3.2 HERBICIDE TREATMENT

A. In all areas infected with weed and/or grass growth, a systemic herbicide, such as roundup, shall be applied per manufacturer's rates. When it has been established where work will be done, the systemic herbicide shall be applied in accordance with manufacturer's labeling to kill all noxious growth. Contractor shall schedule his work to allow more than one application to obtain at least 95% kill of undesirable growth. Contractor shall exercise extreme care to prevent damage to desirable existing growth. If necessary, Contractor shall conduct a test to establish suitability of product and applicator to be used on this project, prior to execution of the full application.

3.3 PLANT PIT EXCAVATION & BACKFILLING

A. Trees: See the Planting and Bracing Details and notes.

B. Shrubs and Groundcover: Shrubs and groundcover shall be planted in a soil bed as described in the notes and details. Space shrubs and provide setback from curb & pavements as shown, plants to remove any air pockets in the planting holes, immediately after installation.

C. See notes in plans that describes schedule of water after installation.

D. Watering of field-grown plants. Thoroughly puddle in water to remove any air pockets in the plant hole.

3.4 WATERING

A. The Contractor is responsible to provide the water and means of distribution (i.e. hand watering or water truck) during the maintenance period and extending into the period after acceptance until the full schedule as listed below is complete. Water for trees and other large field grown plants shall be supplemented by hand or water truck, in addition to the irrigation system. (if one is provided).

AMOUNT OF WATER
for trees and large shrubs 10 gallons
- from 5 to 8 inch caliper 25 gallons
- 9 inch and up caliper 50 gallons

FREQUENCY OF WATER
Daily for the first week
3 times per week for weeks 3-5
2 times per week for weeks 6-8
1 time per week for weeks 9-12

D. Water in plants by thoroughly soaking of the entire root ball immediately after planting. For large trees and shrubs, add water while backfilling hole to eliminate any air pockets in the soil around the root ball.

E. Water shrubs, sod and groundcover a minimum of once daily for a week or until an irrigation system is fully operational. If no irrigation system is to be installed, the Contractor shall be responsible for watering the shrub, sod, and groundcover for a period of one month after installation of each section of the planting installed.

3.5 FERTILIZING

A. Add fertilizer on top of the surface of shrubs beds & tree & palms root balls two (2) months after installation. Fertilize sod within two (2) days after installing after planting of each segment of the job. Fertilizer shall be applied after soil has been well moistened. Fertilizer shall be washed off of plant leaves and stems immediately after application. Apply at the following rates:

1) Trees & Large Shrubs: One (1) pound per inch of trunk diameter, spread evenly over the root ball area.

2) Shrubs: One half (½) handfull per shrub, spread evenly over the root ball area.

3) Groundcover: Twelve (12) pounds per 1000 sq. ft. of bed area.

4) Sod: 12 pounds per 1000 sq ft. Wash fertilizer off blades immediately after spreading.

3.6 MULCHING

A. Spread mulch two (2) inches thick uniformly over the entire surface of shrubs and groundcover beds, depth measured after settling unless otherwise specified in the plans. Provide 36" diameter bed of mulch, measured from outer edge of the trunk, for all trees and palms planted in sod areas. Keep mulch away from contact with the trunk. Create a 6" high ring of mulch at the outer edge of tree & palm holes.

3.7 GUYING & BRACING

A. See the details bound herewith or made part of the plans.

3.8 SODDING

A. Provide a blanket of planting soil as described in the notes in these plans. Prior to planting, remove stones, sticks, etc. from the sub-soil surface. Excavate existing non-conforming soil as required so that the finish grade of sod is flush with adjacent pavement or top of curb as well as adjacent sod in the case of sod patching.

B. Place sod on moistened soil, with edges tightly butted, in staggered rows at right angles to slopes. The sod shall be rolled with a 500 pound hand roller.

C. Keep edge of sod bed a minimum of 18" away from groundcover beds and 24" away from edge of shrub beds and 36" from trees, measured from center of plant.

LANDSCAPING CONSTRUCTION NOTES

| REVISIONS | |
|---|---|
| DESCRIPTION | DATE |
| 1. | |
| 2. | |
| 3. | |
| 4. | |

APPROVED BY:
Diana Sudarasi Bitaca, P.E. No. 55926
DATE:

CORZO CASTELLA CARBALLO THOMPSON SALMAN, P.A.
ENGINEERS-ARCHITECTS-PLANNERS

| | |
|---|---|
| DATE: | 03-22-12 |
| DRAWN: | DSB |
| DESIGNED: | DSB |
| CHECKED: | RC |
| QC: | RC |
| CADD FILE: | |

VILLAGE OF
KEY BISCAYNE
FLORIDA

VILLAGE GREEN TOT LOT
BARRIER ENCLOSURE

1108-26

SHEET NO
L2

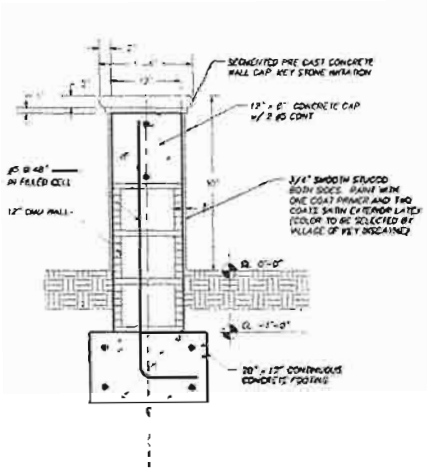


## SITTING WALL SECTION DETAIL

N.T.S.

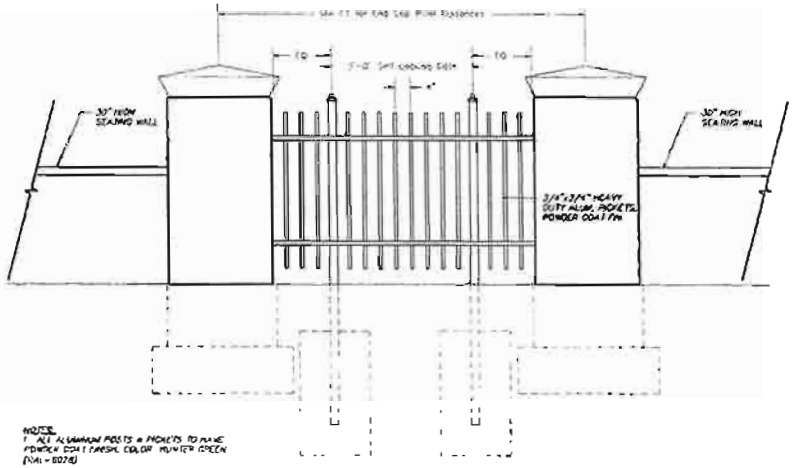


NOTES:
1. ALL ALUMINUM POSTS & PICKETS TO HAVE POWDER COAT FINISH, COLOR HUNTER GREEN (RAL - 6028)
2. ALL CONCRETE TO BE 3000 PSI MIN.

## PARK ENTRY PICKET FENCE DETAIL

N.T.S.

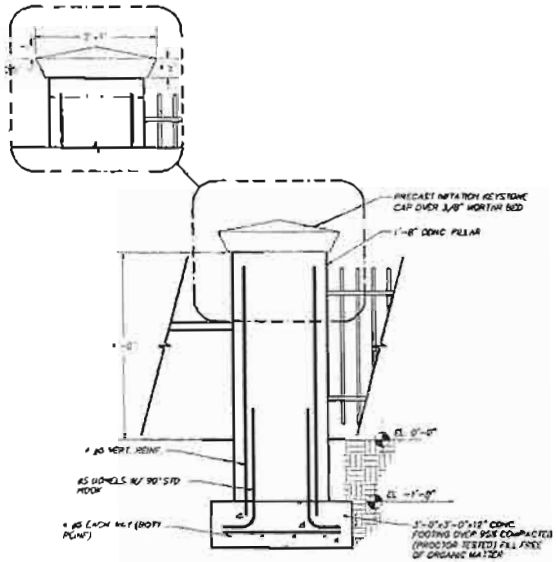


## END CAP PILLAR DETAIL

N.T.S.

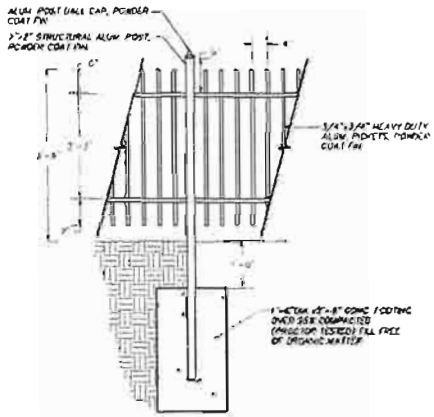


## FENCE AND POST DETAIL

N.T.S.

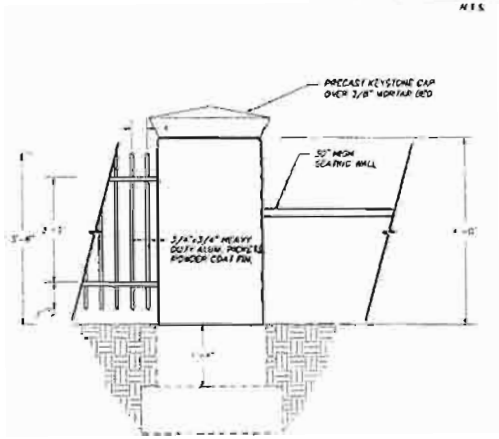


STRUCTURAL DETAILS

| REVISIONS | | APPROVED BY: | CORZO CASTELLA CARBALLO THOMPSON SALMAN, P.A. ENGINEERS · ARCHITECTS · PLANNERS | DATE: 03-22-12 | VILLAGE OF KEY BISCAYNE FLORIDA | VILLAGE GREEN TOT LOT BARRIER ENCLOSURE | 1198-26 | SHEET NO. |
|---|---|---|---|---|---|---|---|---|
| DESCRIPTION | DATE | Diana Sudasassi Dilbar, P.E. No. 56926 | | DRAWN: DSB | | | | S1 |
| 1. | | | | DESIGNED: DSB | | | | |
| 2. | | DATE | | CHECKED: RC | | | | |
| 3. | | | | QC: RC | | | | |
| 4. | | | | CADD FILE: | | | | |